4,000V Surface Mount Multiplier

Original Released: 01-01-08
Revised Date: 05-08-09

1.0µA - 200.0µA • 10 Stages

ELECTRICAL CHARACTERISTICS AND MAXIMUM RATINGS						
Part Number	Maximum A.C. Input Voltage	Typical D.C. Output Voltage (One Multiplier)	Maximum D.C. Output Voltage (Two Multipliers in Series or Floating)	Typical Output Current Range (1)	Typical Frequency	Number of Stages
	V_{PP}	V_{DC}	V_{DC}	µA	kHz	
MVM422P10	1200	0 - 4000	8000	1.0 - 200.0	10 - 100	10
Operating Temp: -55°C to +150°C Storage Temp: -65°C to +150°C						

(1) Refer to load lines on next page.

Plating:
Copper strike per MIL-C-14550B (ref 50-100 µinches) Tin per ASTM-B-545, 100sn, Reflow Finish, (100-300 µinches tin over copper strike).

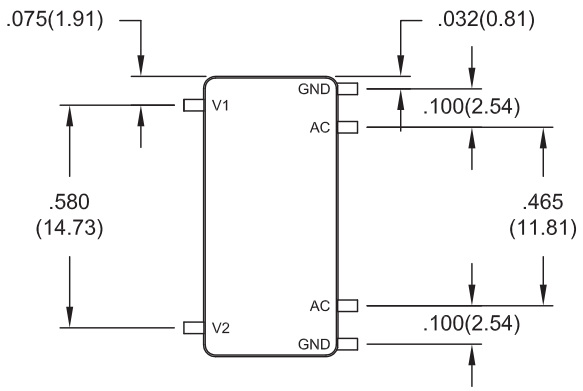

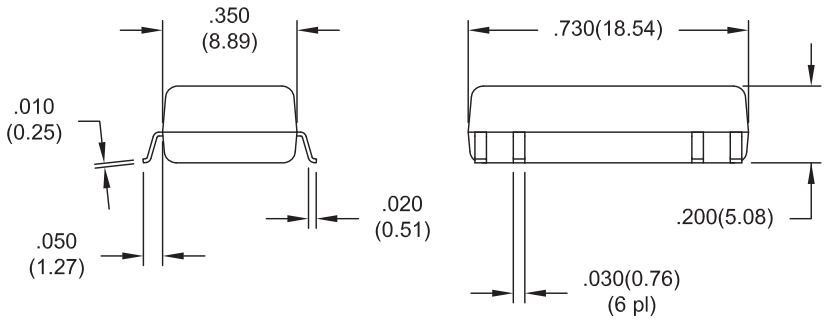

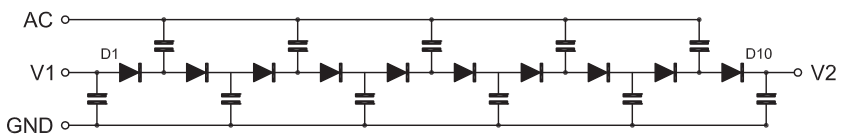

Dimensions: In. (mm) • All temperatures are ambient unless otherwise noted. • Data subject to change without notice.

Voltage Multipliers Inc.
8711 W. Roosevelt Ave.
Visalia, CA 93291 USA
Tel: 559.651.1402
Fax: 559.651.0740
www.voltagemultipliers.com
www.highvoltagepowersupplies.com

Typical Single Multiplier Circuit

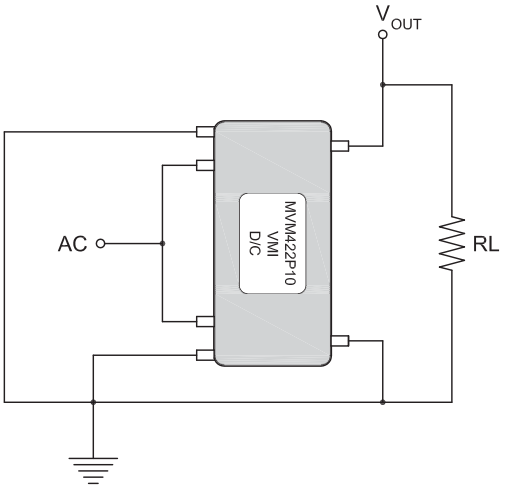

Typical Circuit
Showing Two Multipliers in Series

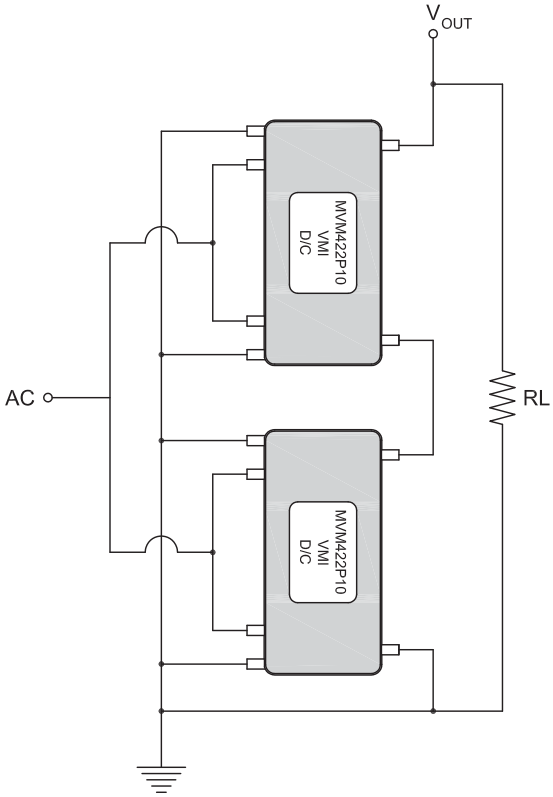

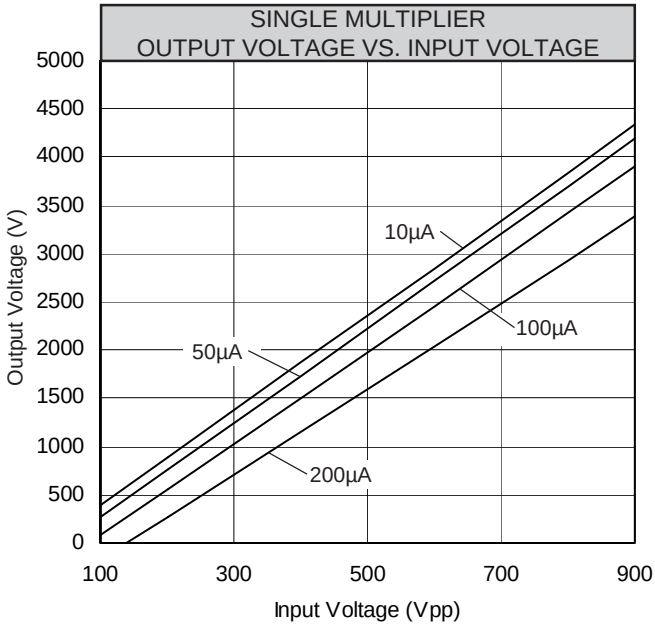

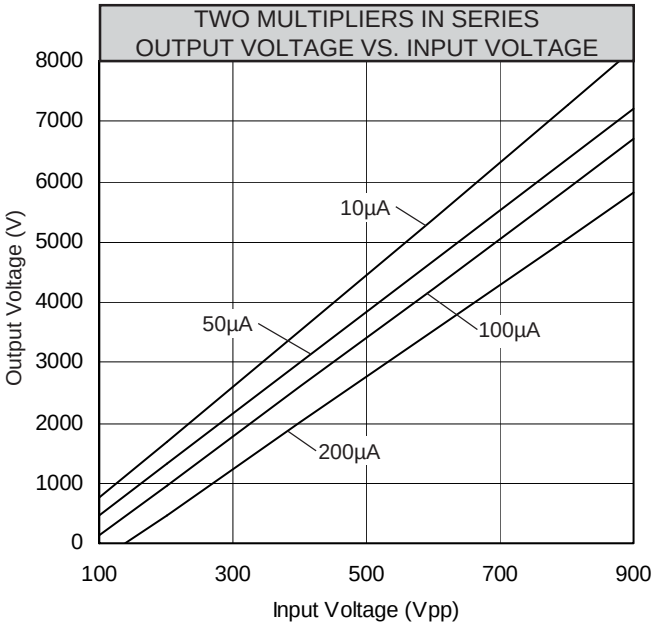

Dimensions: In. (mm) • All temperatures are ambient unless otherwise noted. • Data subject to change without notice.

Voltage Multipliers Inc.
8711 W. Roosevelt Ave.
Visalia, CA 93291 USA
Tel: 559.651.1402
Fax: 559.651.0740
www.voltagemultipliers.com
www.highvoltagepowersupplies.com